PROJECT

VARUN, The Underwater Drone

A Technical Report

August 2025

Contents

Table of Contents

1. Introduction

2. Technical Specifications
   2.1 Components to be used

3. Propulsion and Thruster Mechanics
   3.1 Thruster Configuration
   3.2 Propeller Hydrodynamics
   3.3 Control Mixing and Stability
   3.4 Reliability and Redundancy

4. Hull and Pressure Resistance
   4.1 Operating Pressure
   4.2 Cylindrical Hull Stress
   4.3 Sealing and Endcaps

5. Buoyancy and Stability

6. Electronics and Power
   6.1 Power Distribution
   6.2 Electromagnetic Interference Mitigation’

7. Communications
   7.1 Internal Communication
   7.2 External Communication

8. Software and Control
   8.1 Architecture
   8.2 SLAM and Computer Vision

9. Assembly and Manufacturing Methodology

10. Applications and Future Work
    10.1 Applications
    10.2 Future Work

11. Conclusion

Introduction

A Custom-Built Modular ROV for Exploration and Research

Varun is a custom-designed underwater Remotely Operated Vehicle (ROV), engineered to accompany researchers, explorers, and industrial operators into the vast depths of the ocean. Unlike conventional drones, Varun is built with a philosophy of **modularity, resilience, and scientific adaptability**. Inspired by the challenges of deep-sea robotics, it combines efficient propulsion, pressure-resistant hull mechanics, and onboard intelligence to make underwater exploration both safe and effective.

Designed around a lightweight **3D-printed polymer hull** and a transparent **acrylic electronics bay**, Varun provides both protection and visibility for its critical subsystems. The system is balanced through **neutral buoyancy modules** and adjustable ballast, ensuring stability under dynamic ocean currents. This build allows it to function seamlessly as a research companion capable of tasks such as **marine biology surveys, archaeological exploration, infrastructure inspection, and environmental monitoring**—all without risking human divers in hostile conditions.

At its heart, Varun is not only a robust tool for aquatic missions but also an **open platform** for experimentation. Equipped with high-quality cameras, an array of sensors, and support for **computer vision and machine learning frameworks**, Varun becomes a floating laboratory that can adapt to diverse missions ranging from real-time SLAM (Simultaneous Localization and Mapping) to automated object detection and classification.

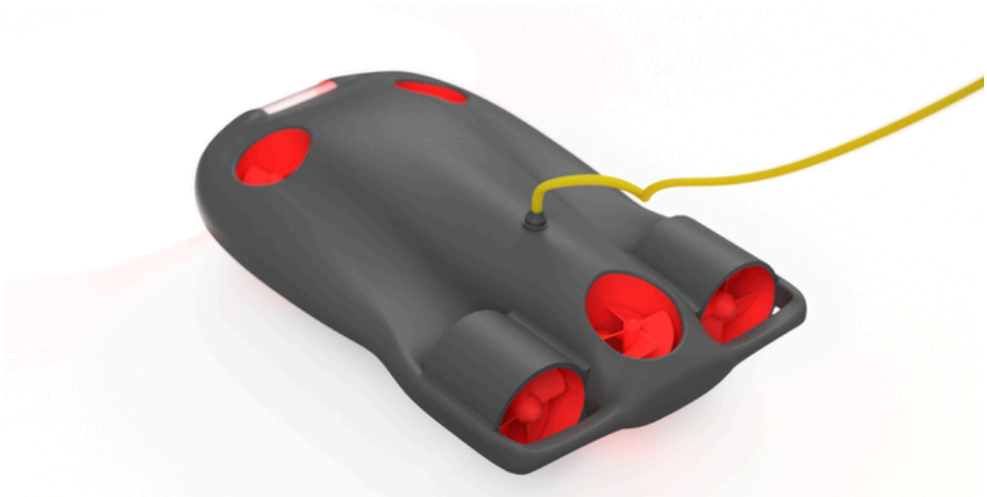

Figure : CAD model of Varun

Varun Underwater Drone

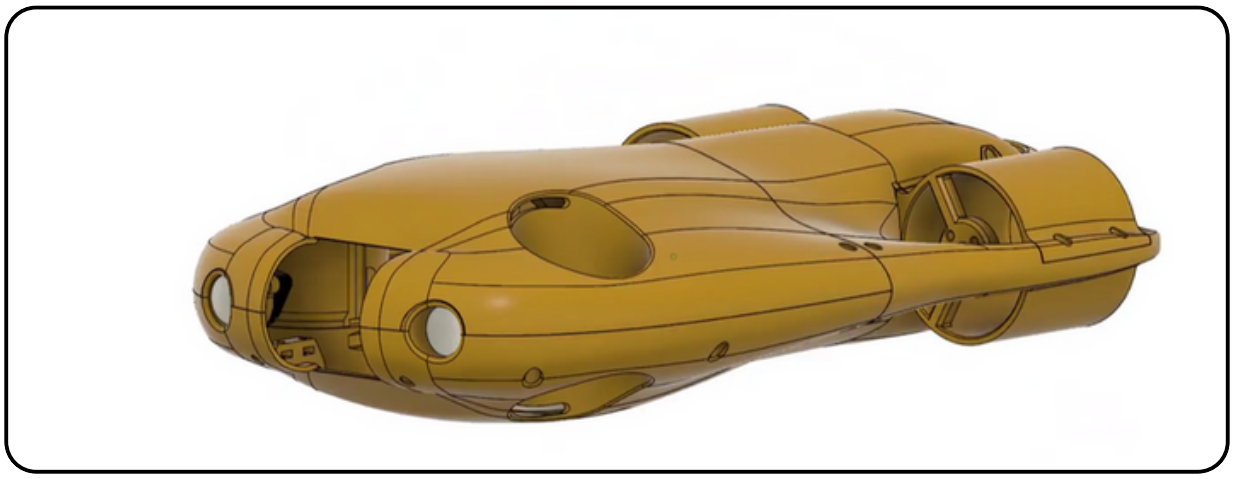

Figure : Front view of Varun

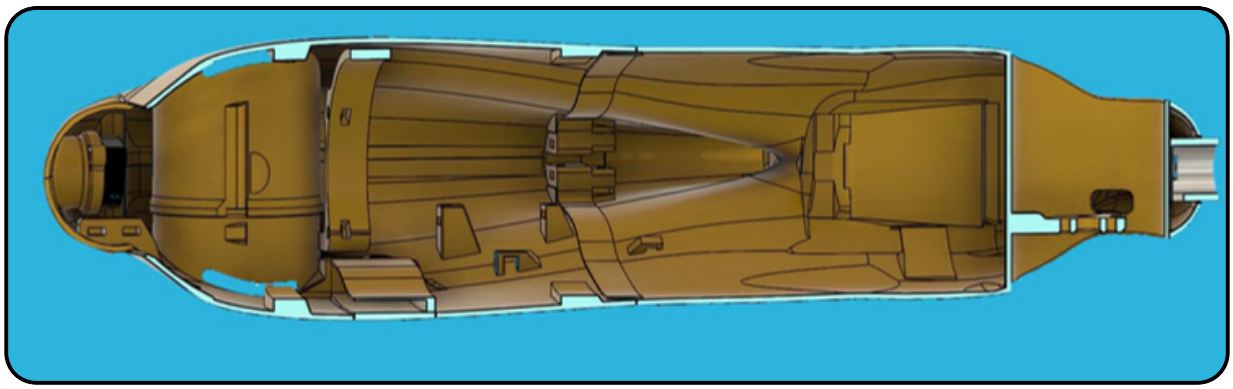

Figure : Side view of Varun

Technical Specifications

Maximum Depth	85 meters
Endurance	2 hours (average)
Speed	2.5 m/s
Weight	Prototype: 4 kg; Production: 7 kg
Onboard Computers	Raspberry Pi 5, Teensy 4.0,PIXhawk
Power Source	4S LiPo 5200mAh (x4)
Sensors	IMU , pressure, temperature, depth GPS(surface only)
Camera	USB IMX291 HD
Lighting	5 × 5W LEDs
Propulsion	5 × Waterproof BLDC + ESCs (relay-based reversal)

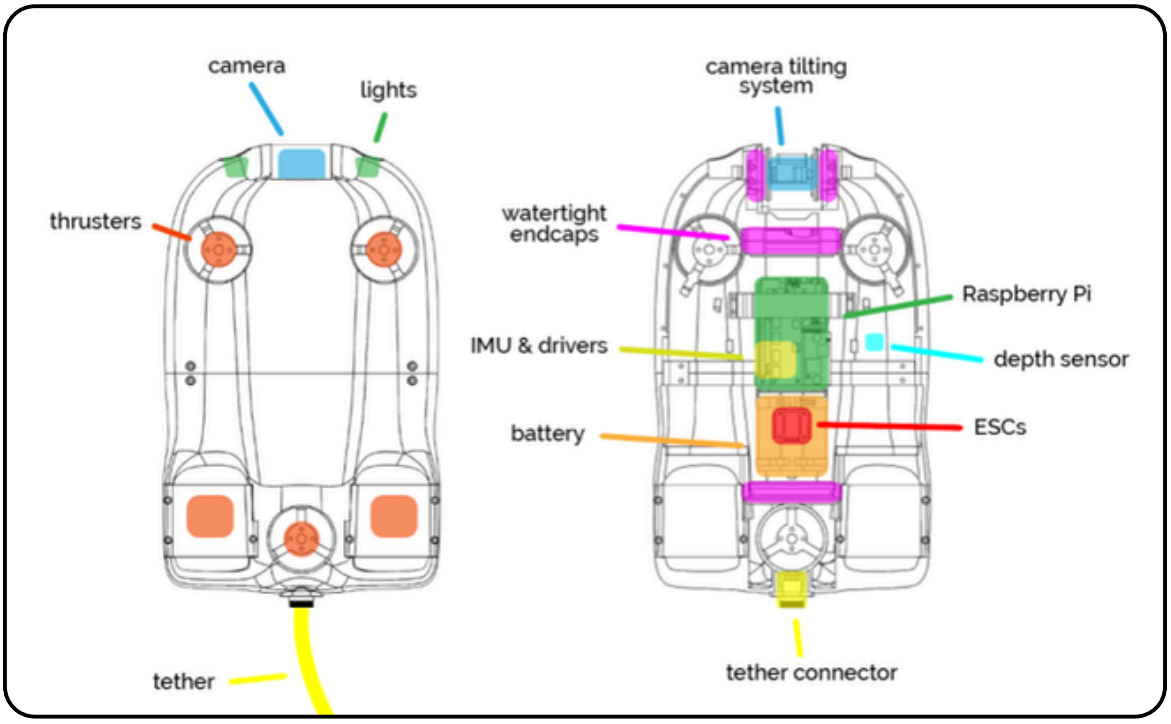

Figure : Rough layout of main components

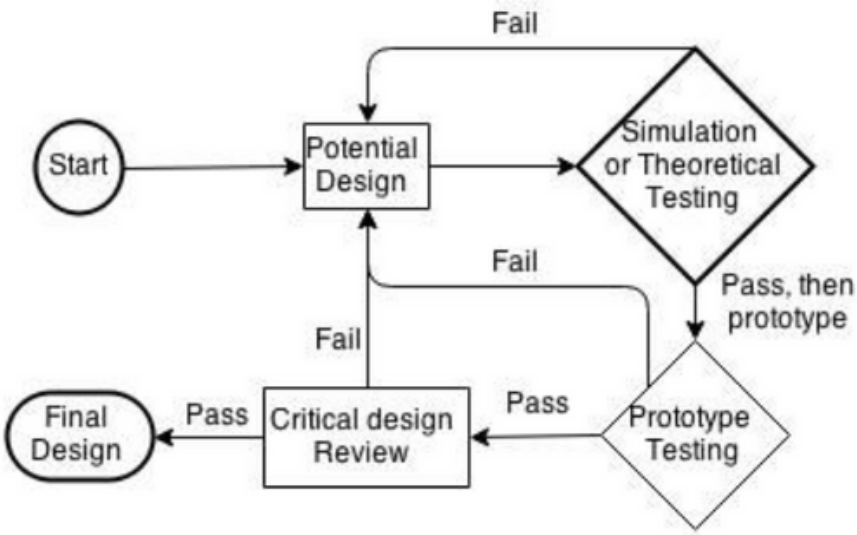

Figure : Design flow

Components to be used

Electronics Bay & Core Parts

Component	Quantity / Details
Electronics pipe	1
Connector holders (3D print)	As required
Small & large printed parts	As required
4s Li-Po 5200 mAh 90C	6 pcs
BLS connectors (Dupont)	2×20, 1×4, 2×1×3
BLS pin female (Dupont)	8 pcs
ESC 4-in-1 25A+	1
ESC 1-in-1 20A+	1
Raspberry Pi 5	2 pcs
Heatsinks for Raspberry Pi	As required
Fuse 60A	1
Pixhawk flight controller	1
Pixhawk power module	1
LED drivers	2 × 5W/3W
Micro-SD card	128 GB
USB Type-A connector	1
MOSFET (IRF1404)	1
Resistor 10 kΩ	1

Camera Module

Component	Quantity / Details
Camera cover (3D print)	1
Camera holder (3D print)	1
Sony IMX323 camera + USB cable	1

Tether and Charging

Component	Quantity / Details
WEIPU Connector (male WF-16 TE, 10-pin)	1
WEIPU Connector (female WF-16 ZM, 10-pin)	1
WEIPU Connector (male WF-16 TI, 10-pin)	1
Charger for 4S battery	1
Charger cable (4-wire JST-XH)	1

External Components

Component	Quantity / Details
Pressure sensor case (3D print)	1
LED cases (3D print)	2
Propeller A2212 (right-hand, 3D print)	2
Propeller A2212 (left-hand, 3D print)	1
Propeller Sunnysky (right-hand, 3D print)	1
Propeller Sunnysky (left-hand, 3D print)	1
WEIPU connector part (3D print)	1
Pressure sensor (GY-MS5837)	1
A2212 motor (930KV/1000KV)	3
Sunnysky motor (980KV)	2
Metal weights	12 × 5 g
LED on PCB (~6000K)	2 × (5W/3W)
Waterproof LED lens (90°)	2
Buoyancy foam	10 mm sheet

Mechanical Components

Component Name	Size and Quantity
Carbon fiber tube	As Per Requirements
Bearings (DHve bearings, Bearmgs)	
Steel bar	
Motor mounts	
Small clamp	
Big O-ring (60x5mm)	
Small O-ring (38x3mm)	
Acrylic pipe	
Silicone grease	
Optical fiber cables	
Thread lock 243 (blue)	
Cable braid 4mm	
Glue stickand Double side tape	

Mechanical Components

Component Name	Size and Quantity
Standoffs	(M3x25+6M-F, M3x25F-F) Qty - As Per Requirements
Screws	(M3x6, M3x8, M3x10, M3x12, M3x16, M3x20, M3x25, M3x30, M3x40, M3x50, M2x6, M2x10, M5x16) Qty - As Per Requirements
Nuts	(M3 hexnut, M3 square nut, M2 hexnut, M5 hexnut, M5 square nut) Qty - As Per Requirements

Miscellaneous Components

Component Name	Quantity
Veroboard/Prototypeboard/ PCB_design	As Per Requirements
Antenna GPS	
Antenna LoRa	
Telephotolens	
RJ45 connectors	
Transreceiver CAN	
3D printing filament (PLA-CF,PLA,PET-G)	
Battery BMS 3.7	
Step-up converters	
Slide-switch	
Buzzer	
AMS1173.3V	
Push switch	
Step-down converters	

Miscellaneous Components

Component Name	Quantity
ESP-32dev-board	As Per Requirements
LEDs	
Micro HDMI for RasPi	
USB B - USBC	
LM7805sv	
Level shifter	
CP2102	
USB-C cable	
Powerswitch	
Connectors XT-60	
Black/Red/Yellow Electrical Tape	
MCP3008	
A03401A	
MIC5219	
SS34	
TP4056	

Miscellaneous Components

Component Name	Quantity
Tactile switch	As Per Requirements
Male x male connectors (20-pin,18-pin)	
Soldering wire	
Solder wick	
Epoxy/1-minute epoxy	
Heat - shrink tubes (black 6mm,black 3mm,yellow/green 2.5mm,orange/red 2.5mm)	
Insulation tape	
Hot glue	
Thermal paste	
Solder heat - shrink (red waterproof, white waterproof)	

Miscellaneous Components

Component Name	Quantity
Jumper wire (male to male)	As Per Requirements
28 AWG flat cable (4 strand)	
20 AWG red/black silicone cable	
15 AWG red/black silicone cable	

Propulsion and Thruster Mechanics

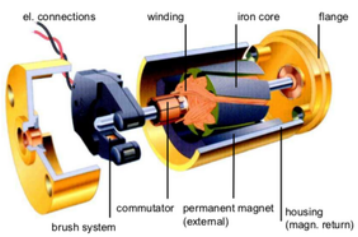

Figure : BLDC motor

3.1 Thruster Configuration

Varun employs five thrusters: two horizontal and three vertical. This configuration enables full six degrees of freedom (6 DOF) maneuverability, including surge, sway, heave, roll, pitch, and yaw.

Figure : Thrusters (BLDC motors)

3.2 Propeller Hydrodynamics

Each thruster uses a ducted three-blade propeller inside a Kort nozzle. This design improves thrust efficiency by reducing tip vortex losses. The thrust generated by a propeller is given by:

$$T = CT \cdot \rho \cdot n^2 \cdot D^4 \qquad (3.1)$$

where CT is the thrust coefficient, ρ the fluid density, n the rotational speed (rev/s), and D the diameter of the propeller. At 5000 RPM and a propeller diameter of 70 mm, each thruster produces approximately 2–2.5 kgf, yielding a total thrust capacity of about 12 kgf.

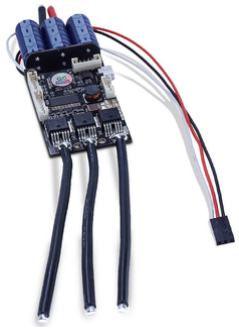

Figure : Motor Drivers (ESC)

3.3 Control Mixing and Stability

- Yaw: Achieved via differential horizontal thrust.
- Pitch: Controlled by opposing thrust from fore and aft vertical thrusters.
- Roll: Controlled by differential side vertical thrusters.

PID controllers integrate IMU and depth sensor data for stable maneuverability.

3.4 Reliability and Redundancy

The thruster layout ensures operational stability even in the event of single thruster failure. Each ESC is isolated on separate rails, minimizing cascading faults.

Hull and Pressure Resistance

4.1 Operating Pressure

At 100 meters depth, hydrostatic pressure is:

$$P = \rho g h = 1000 \cdot 9.81 \cdot 100 \approx 9.8 \times 105 \text{ Pa (9.8 bar)} \quad (4.1)$$

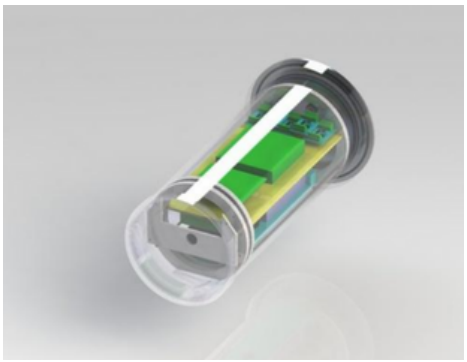

Figure : Design and Structure of hull

4.2 Cylindrical Hull Stress

The electronics bay is an acrylic tube of radius 50 mm and wall thickness 6 mm. The hoop stress is approximated by:

$$\sigma_{hoop} = P \cdot r = t\ 9.8 \times 105 \cdot 0.05 \approx 8.2 \text{ MPa}$$

Given acrylic's yield strength of 70 MPa, the safety factor is about 8.5.

4.3 Sealing and Endcaps

The endcaps use epoxy-reinforced polymer with dual or triple O-rings. Bolted compression ensures uniform sealing, and strain relief collars absorb tether forces.

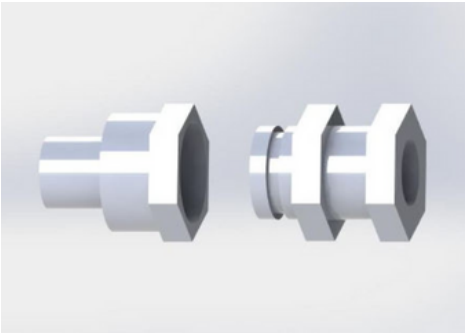

Figure : waterproof connectors

Buoyancy and Stability

Neutral buoyancy is achieved through closed-cell foam and adjustable ballast. The Center of Buoyancy (CB) is placed above the Center of Gravity (CG), ensuring passive roll stability.

The restoring moment is expressed as:

$$M = \Delta \cdot GM \cdot \sin(\theta) \quad (5.1)$$

where Δ is the displacement, GM the metacentric height, and θ the roll angle.

Electronics and Power

6.1 Power Distribution

The 4S LiPo battery feeds into step-down regulators providing isolated rails for logic and motor subsystems. Relays and MOSFETs are used for reversing motor polarity.

6.2 Electromagnetic Interference Mitigation

Shielded cables, twisted pairs, and isolated grounds minimize electrical noise.

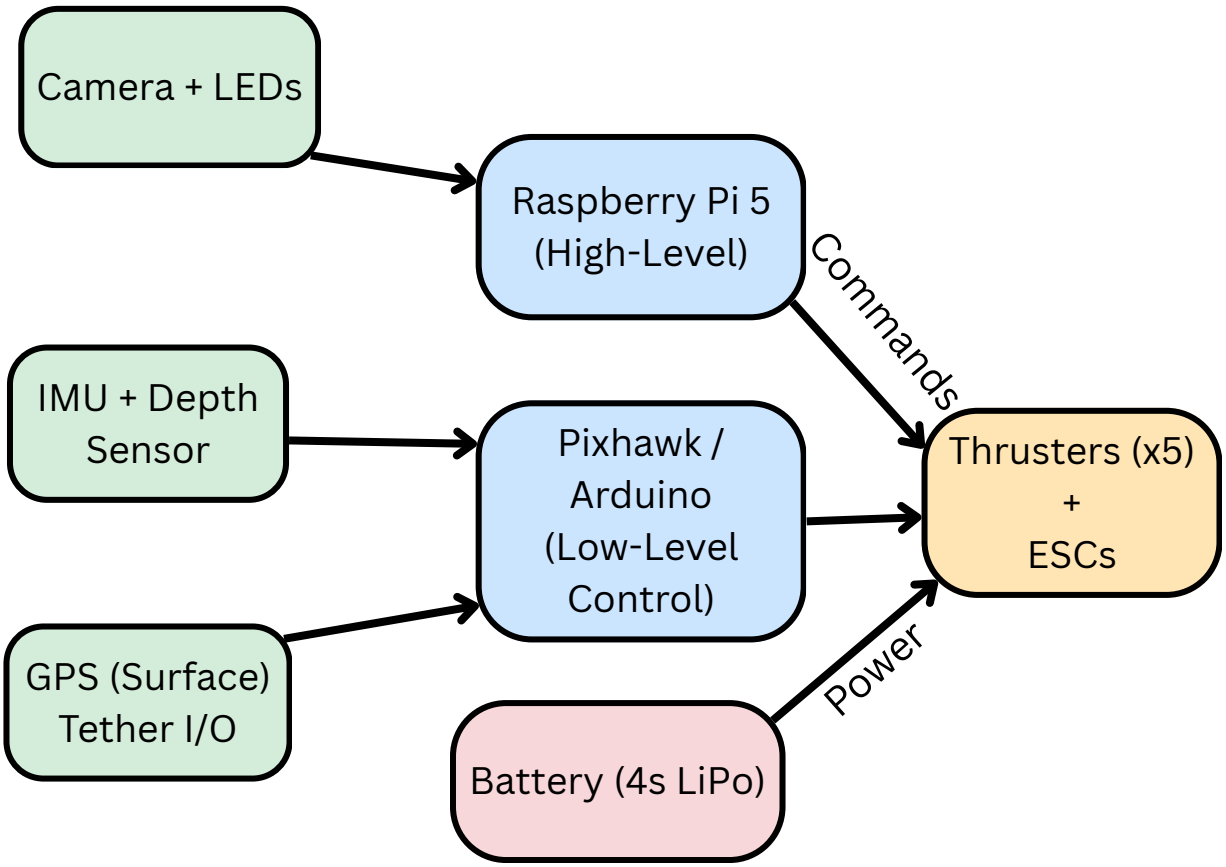

Figure : System component and power distribution layout of Varun

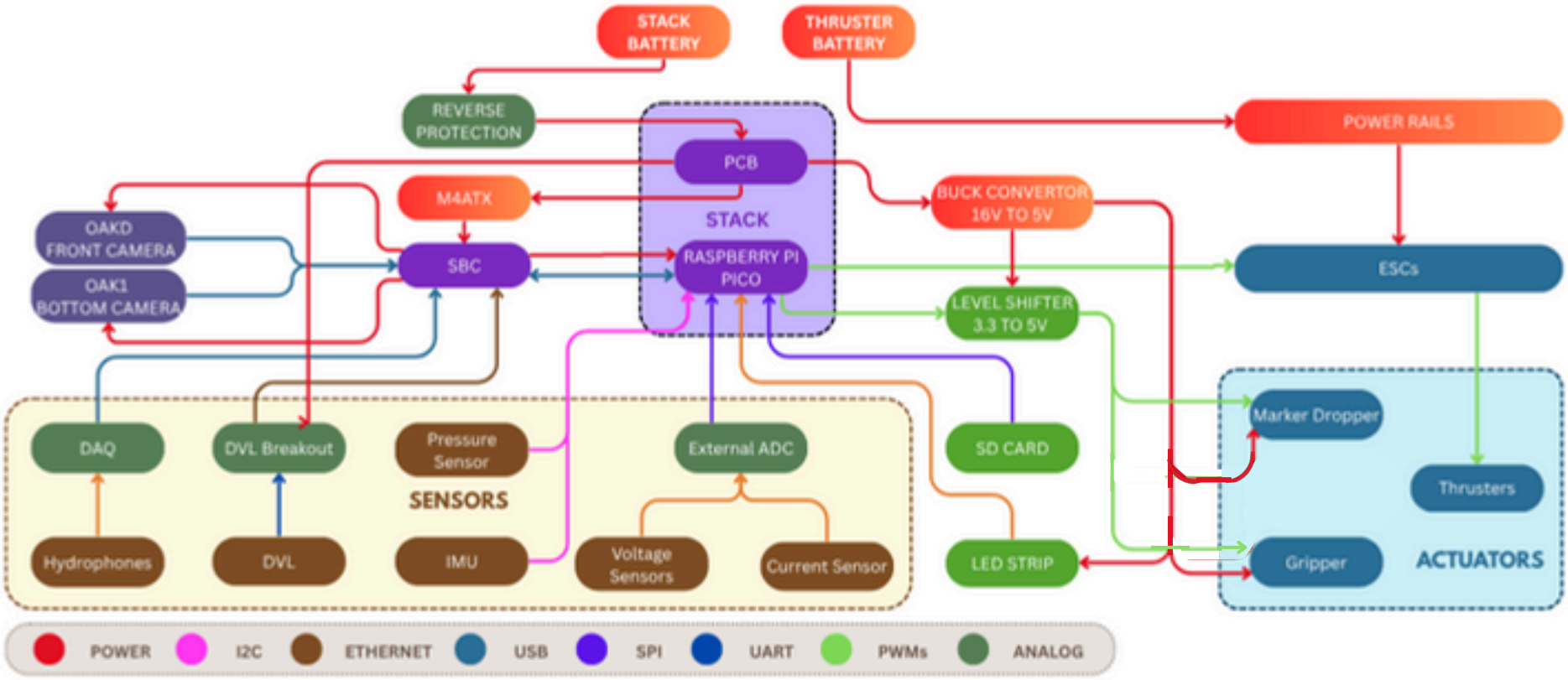

Figure : Electronic System Architecture of Varun

Communications

7.1 Internal Communication

Communication is vital for an autonomous underwater vehicle, enabling reliable data exchange between modules. Internally, wired buses such as UART, I²C, and SPI connect sensors, controllers, and processors, allowing data collection from IMUs, depth sensors, and cameras while sending control signals to thrusters and manipulators. Error detection and redundancy ensure stability and reliability.

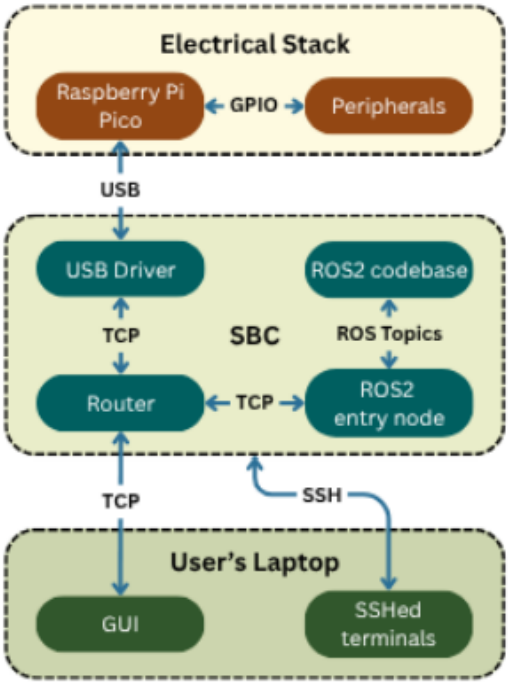

Figure : Communication pipeline

7.2 External Communication

Externally, communication is more challenging since radio signals attenuate underwater. During testing, tethered Ethernet provides high-bandwidth links for video and debugging, while untethered missions typically use acoustic modems for low-rate telemetry and commands. In shallow waters, optical systems using LEDs or lasers can support faster short-range transfers.

Together, robust internal buses and efficient external links give the AUV both autonomy and operator supervision, ensuring reliable operation and mission safety.

Figure : Optical fiber to RJ45

Software and Control

8.1 Architecture

The Raspberry Pi runs Linux with Python modules for sensor fusion, SLAM, and object detection. The Arduino Nano executes low-level motor PID loops.

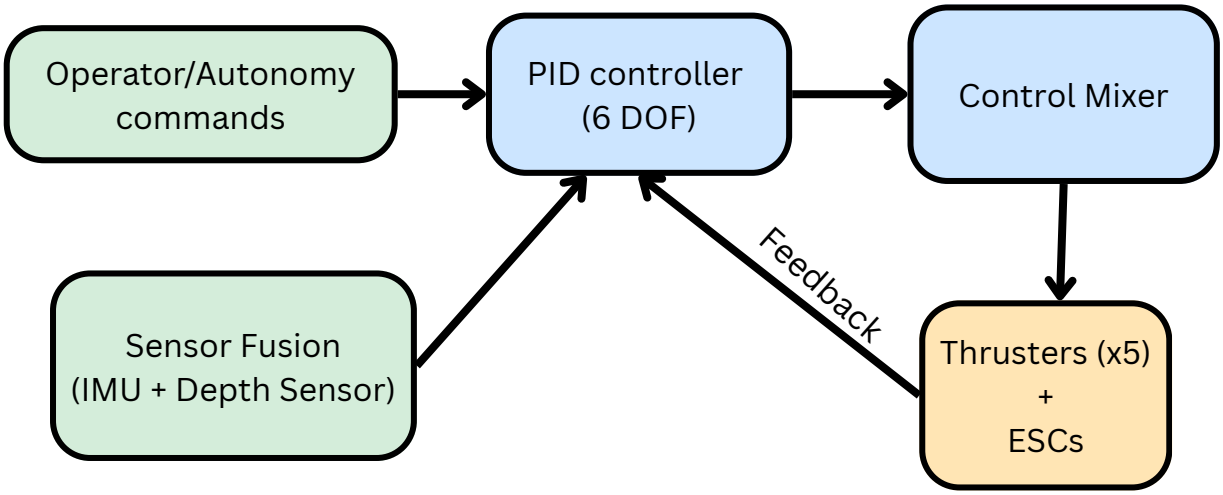

Figure : Control loop architecture showing PID control and feedback integration with thrusters.

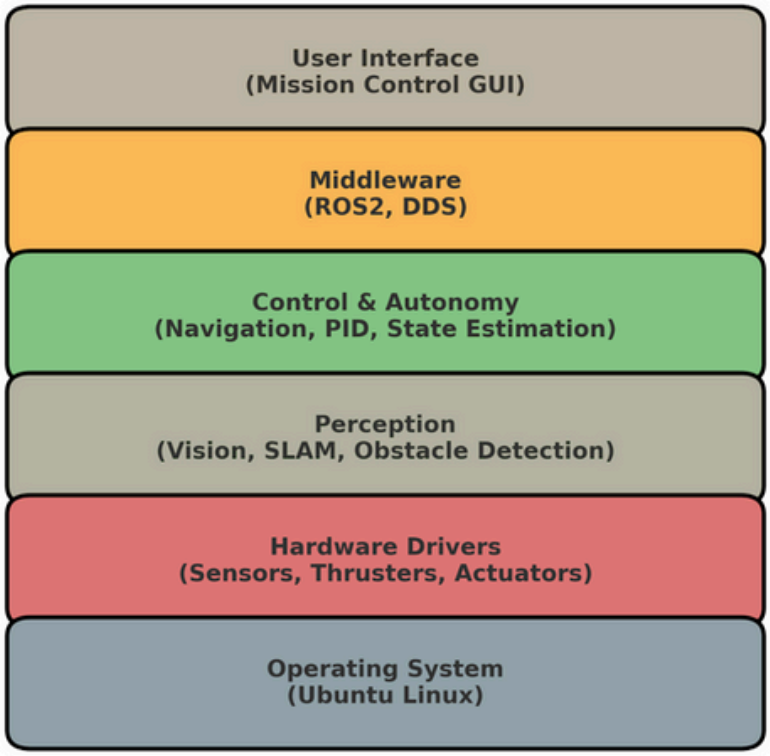

Figure : Software Architecture of Varun

Assembly and Manufacturing Methodology

1. CAD-driven 3D printing of structural parts.
2. CNC machining of shafts and frames.
3. Epoxy potting of motor windings.
4. Multi-O-ring sealing of endcaps.
5. Pool testing followed by open-water validation.

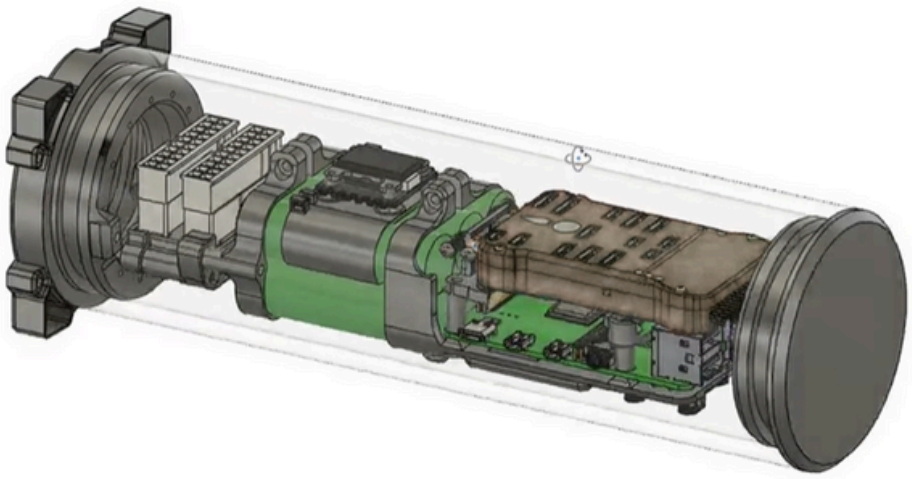

Figure : Internal structure of acrylic tube of Varun

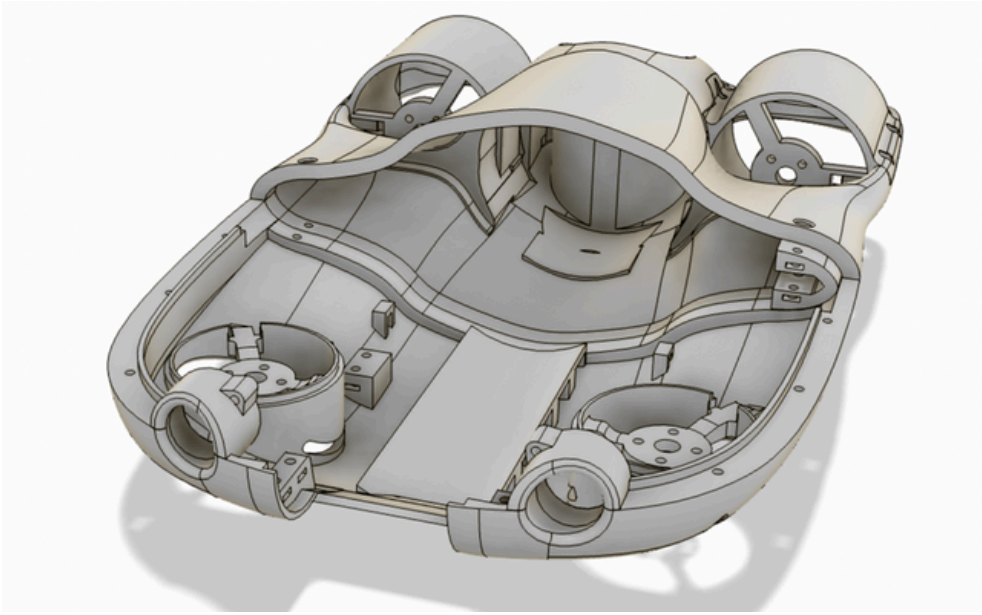

Figure : Interior CAD model of Varun

Working Block diagram of Varun

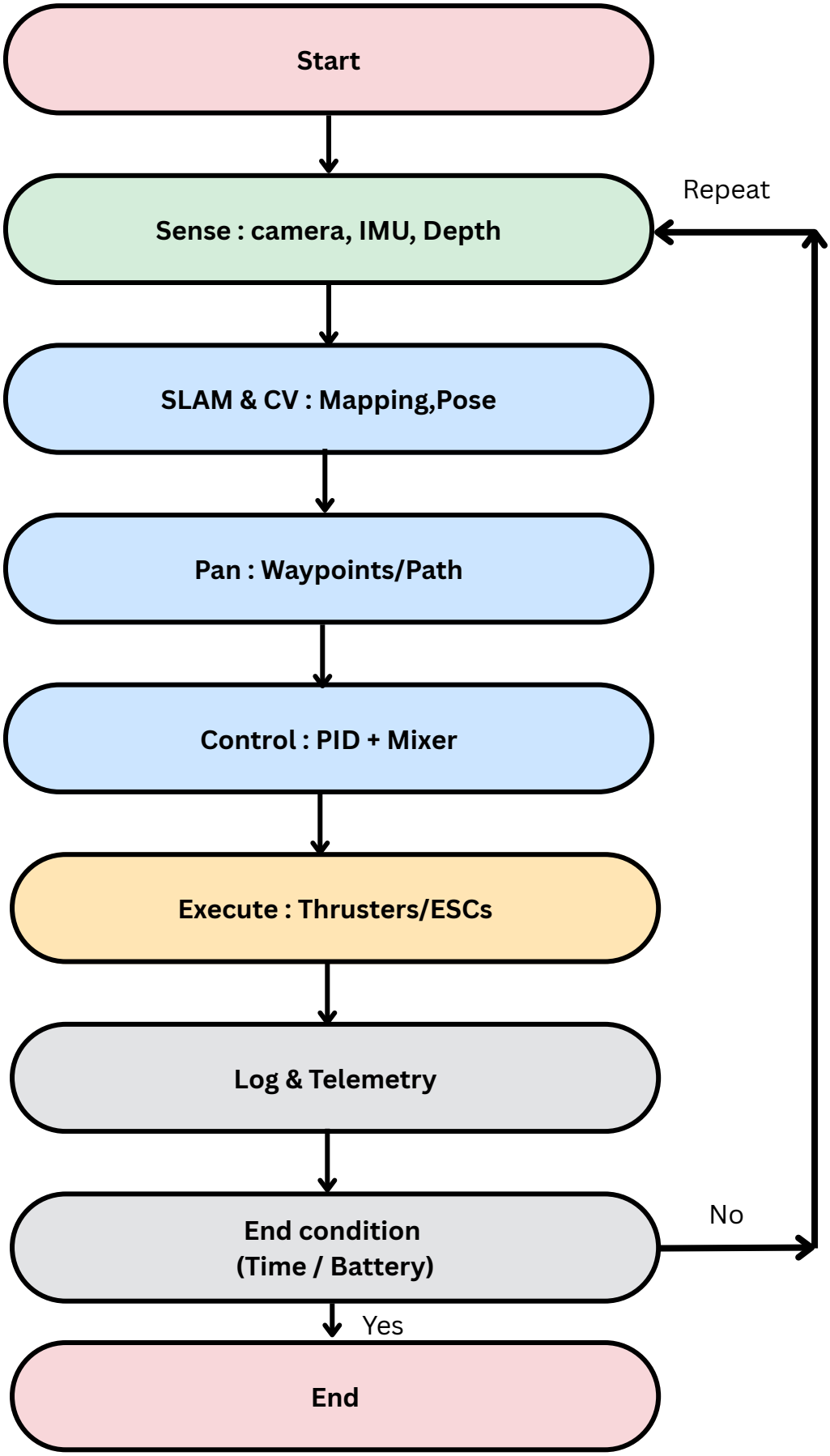

Applications and Future Work

10.1 Applications

- Marine biology: reef monitoring, species identification.
- Industrial inspection: dams, pipelines, ports.
- Archaeology: shipwreck exploration.
- Environmental monitoring: pollution mapping.

10.2 Future Work

- Modular payload bays.
- AI-driven autonomy and swarm coordination.
- Extended endurance with improved energy systems.
- SLAM and Computer Vision.
- Enhance the navigation module by integrating a Doppler Velocity Log (DVL).

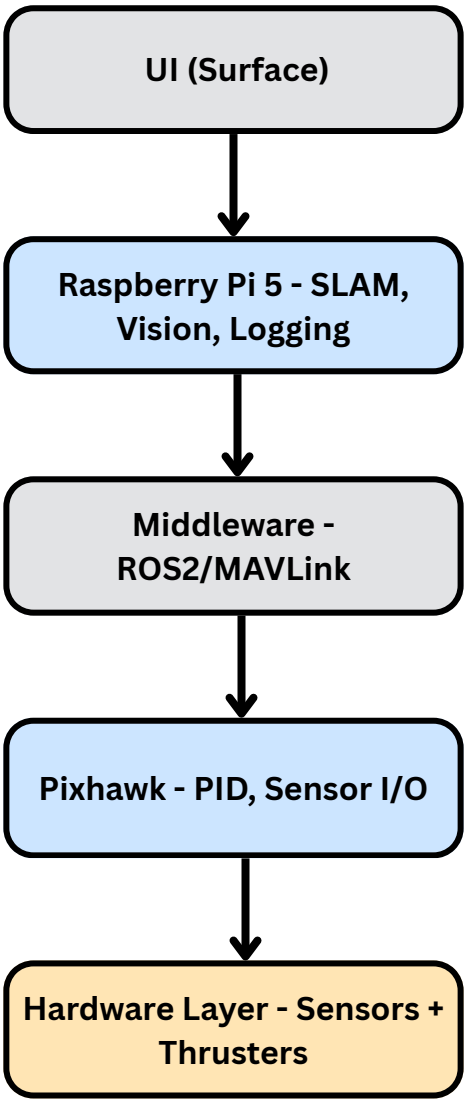

Figure : Execution flowchart of Varun

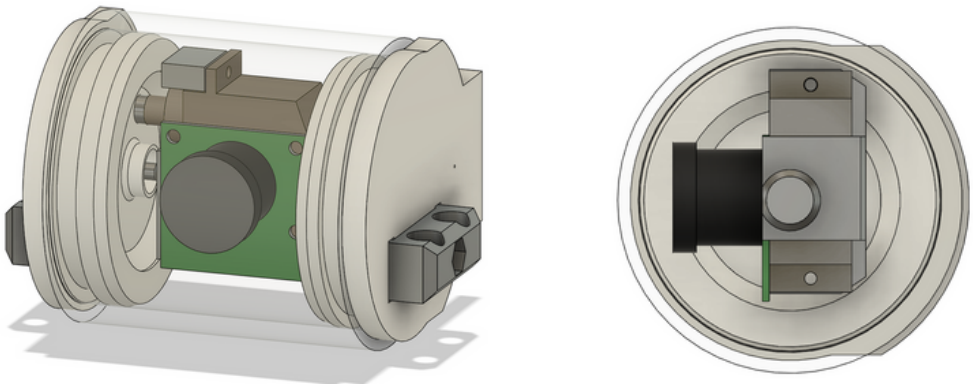

Figure : CAD model of camera enclosure to be used in Varun

Conclusion

Varun represents a well-balanced integration of **modularity, performance, and safety** in underwater robotics. Its five-thruster system enables full six-degree-of-freedom maneuverability, while redundancy and PID-based control ensure reliable operation under variable currents. The **acrylic hull**, designed with a high safety factor, combined with **multi O-ring sealing and buoyancy optimization**, provides resilience against the challenges of deep-water deployment.

The electronics architecture, separating high-level computation on the Raspberry Pi from low-level control on the Arduino Nano ensures both real time responsiveness and advanced autonomy. Meanwhile, the power system with isolated logic and motor rails emphasizes fault tolerance and EMI resistance.

By combining **3D printing, CNC machining, and epoxy waterproofing**, Varun demonstrates a modern, modular approach to rapid prototyping. This makes it not just a capable ROV for today's missions but also a **flexible platform for future expansion**, whether in marine research, industrial inspection, or autonomous swarm operations.

In essence, Varun showcases how thoughtful engineering and modular design can deliver an adaptable and robust underwater system, ready to meet both present and future challenges.